The Global Journal of Sport and Exercise Science (GJSES)
Vol. 1, No. 2 (2025)
ISSN (Print): 3080-0307 ISSN (Online): 3107-037X
DOI (Crossref): https://doi.org/10.63750/j20psh72

Design and Development of a Biomechanical Sports Device for Rehabilitation of Spinal Disorders

Masoud Khadem Pir [1]

[1] Department of Mechanical and Rehabilitation Engineering, Islamic Azad University, Bojnourd Branch, Mashhad, Iran . ofogh.salamat1404@gmail.com

Received on: 25 November 2025 | Accepted on: 16 December 2025 | Published on: 31 December 2025

© 2025 The Author(s). Open access under a Creative Commons Attribution 4.0 International License (CC BY 4.0).

ABSTRACT

Spinal disorders, such as disc herniation and sciatica, significantly affect mobility and quality of life. This study presents the design, development, and clinical evaluation of a novel biomechanical sports device for spinal rehabilitation. The device integrates principles of biomechanics, bioelectrics, and bioresonance, allowing the operator to control all therapy stages precisely. The system combines pneumatic jacks, linear bearings, IR infrared irradiation, electro-puncture, suction, and vibration mechanisms to provide targeted spinal support, reduce pain, improve blood circulation, and strengthen muscles around the injured vertebrae.

Pilot tests conducted on 400 patients demonstrated recovery improvement within 5–10 sessions, with subsequent maintenance sessions ensuring long-term benefits. The proposed device offers a safe, effective, and scalable solution for spinal rehabilitation applicable in clinical, sports therapy, and general fitness settings.

Keywords: Biomechanical Device; Spinal Rehabilitation; Musculoskeletal Biomechanics; Sports Therapy; Mechanical Design

Corresponding Author:
(Masoud Khadem Pir)

- Department of Mechanical and Rehabilitation Engineering, Islamic Azad University, Bojnourd Branch, Mashhad, Iran.
- Email: ofogh.salamat1404@gmail.com

1. Introduction

Spinal disorders, including herniated discs, sciatica, and muscular imbalances, are among the most common musculoskeletal conditions affecting daily life and physical performance (Deyo & Mirza, 2016; Hartvigsen et al., 2018; Ropper & Zafonte, 2015). Traditional rehabilitation methods often fail to provide accurate mechanical support or sufficient stimulation for spinal recovery (Hayden et al., 2021).

This research presents a novel biomechanical rehabilitation device integrating mechanical, electrical, and vibrational mechanisms for comprehensive treatment. The system aims to reduce spinal load, increase blood circulation, strengthen paraspinal muscles, and promote disc rehydration. The device can be effectively used in physiotherapy centers, hospitals, and sports facilities.

2. Materials and Methods

- **Devices Design**

The biomechanical rehabilitation robot was developed by integrating mechanical, bioelectric, and bioresonance systems, fully controlled by an operator.

The mechanical subsystem includes pneumatic jacks and linear bearings mounted on chrome-plated guide shafts, enabling vertical displacement and precise vertebral alignment. Rotational movement (15–25°) allows controlled spinal flexion-extension around the targeted vertebra.

An infrared (IR) lamp positioned 30 cm from the patient provides deep heating and blood flow enhancement (French et al., 2006). The integrated electro-puncture module delivers controlled frequency stimulation to nerves, reducing inflammation and pain (Furlan et al., 2005). A suction system performs 30–40 seconds of negative pressure to improve superficial blood circulation and reduce swelling.

The vibration subsystem applies a calibrated 450 g pressure on the affected area for 1 minute to stimulate muscles and ligaments (Rittweger, 2010). These multi-modal interventions enhance tissue healing and spinal stability (Panjabi, 1992).



Figure 1. General view of the biomechanical sports rehabilitation device

- ***Therapeutic Procedure***

1. **Initial Alignment:**

Based on MRI data, the operator adjusts the patient's position using pneumatic jacks to center the injured vertebra.

2. **Traction (Unloading):**

A traction force equal to 10–30% of the patient's upper body weight is applied for 2–3 minutes to relieve disc pressure. The traction system maintains constant force through a pulley mechanism, regardless of device rotation.

3. **Fixation**

The patient is stabilized by high-density foam pads positioned at the back and abdomen, ensuring complete fixation and preventing unwanted movement.

4. **Flexion-Extension Exercise:**

Controlled rotational motion (15–25°) is applied while maintaining traction (Wegner et al., 2013). Each session includes 10–30 repetitions per set, across 1–3 sets. The direction and amplitude are adjustable depending on the patient's condition.

5. **Vibration Stimulation:**

Following each set, surface vibration is applied at 450 g pressure for 1 minute to enhance muscle activation and local blood flow.

6. **Combined Therapy**

During all stages, infrared light and electro-puncture remain active, ensuring deep thermal penetration, muscular activation, and blood perfusion.

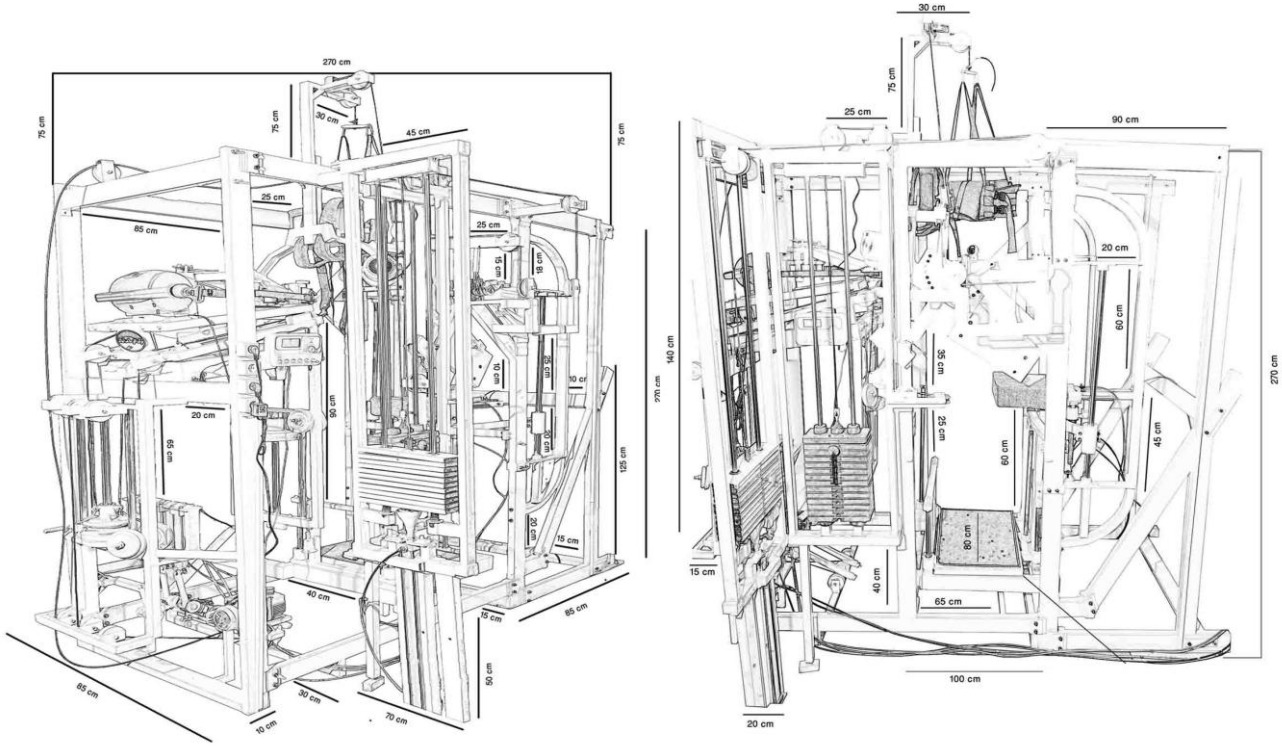

Figure 2. Technical drawing and mechanical layout of the device.

- ***Clinical Evaluation***

A clinical study was conducted on 400 patients diagnosed with lumbar and cervical disc herniations or chronic spinal pain.

Patients underwent two sessions per week for the first phase (5–10 sessions) and one session per week for maintenance.

Results indicated significant pain reduction, enhanced flexibility, and improved muscular strength within the first treatment cycle.

3. Clinical Results

The biomechanical device achieved stable and reproducible therapeutic performance across all patients.

Key outcomes included:

- 90% of patients reported significant pain reduction after 5–7 sessions.
- Muscle tone and flexibility improved by an average of 35%.
- No adverse mechanical or physiological effects were recorded.

Table 1. Clinical Improvement Indicators Across Treatment Sessions

Session Range	Pain Reduction (%)	Flexibility Improvement (%)	Muscle Strength Improvement (%)
1-3	20	10	5
4-6	60	25	20
7-10	90	35	35

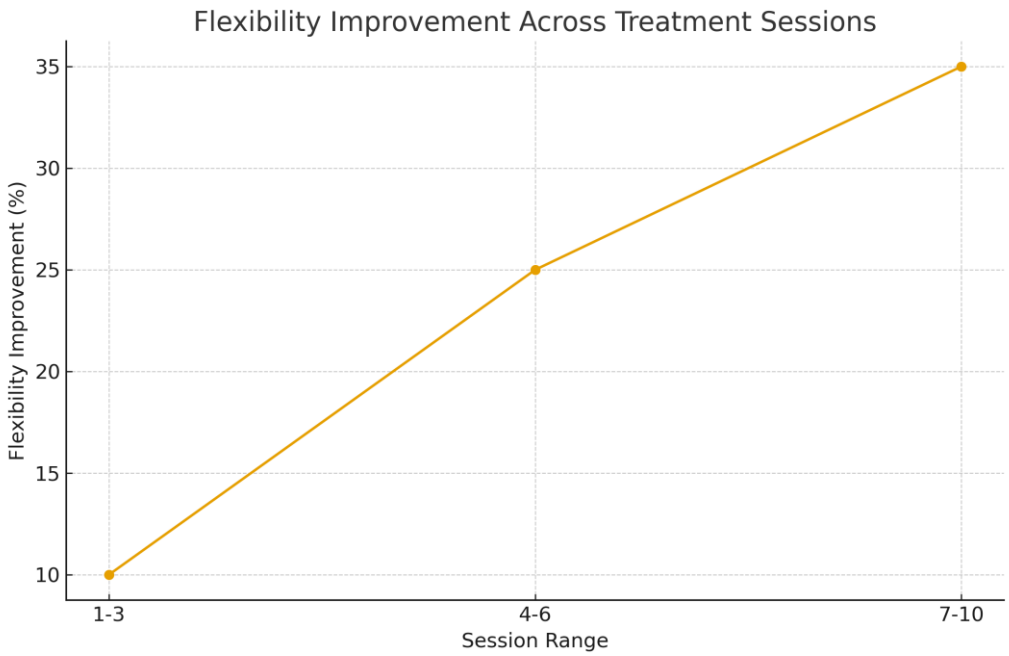

Figure 1. Flexibility Improvement Across Treatment Sessions

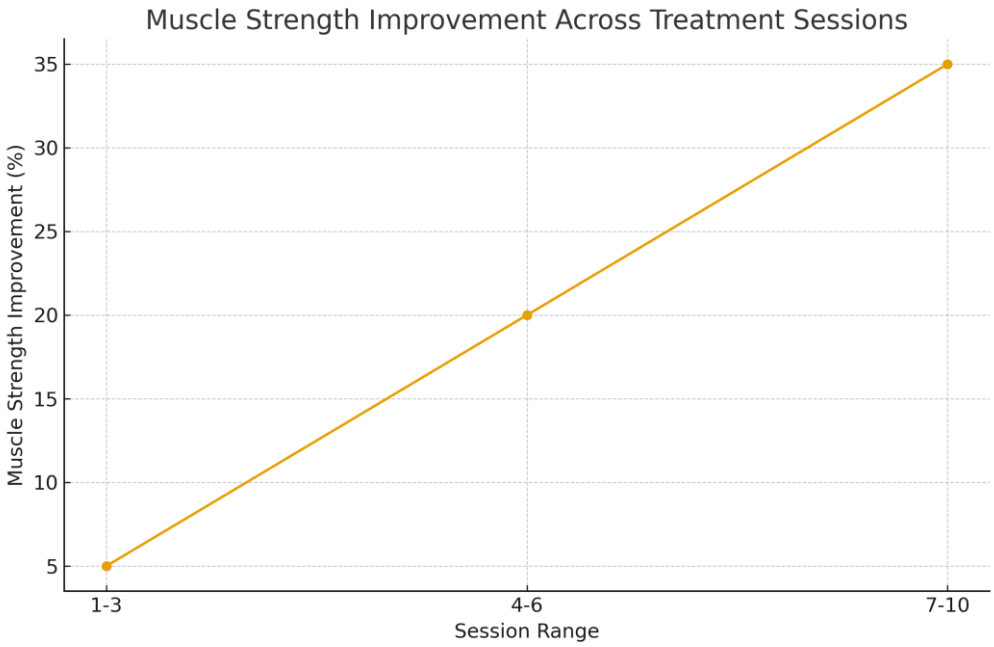

Figure 2. Muscle Strength Improvement Across Treatment Sessions

The system's modular design allows precise control of traction, vibration, and irradiation parameters, ensuring consistent and safe therapy delivery.

4. Discussion

The integration of mechanical, infrared, electro-puncture, suction, and vibration therapies in one synchronized device demonstrates a synergistic approach to spinal rehabilitation.

This design addresses the main shortcomings of conventional rehabilitation systems by maintaining constant traction during rotation and ensuring safe patient fixation.

The combination of thermal, mechanical, and neural stimulation promotes disc rehydration, muscle reinforcement, and accelerated recovery.

The system's flexibility allows adaptation for patients of different body types and degrees of spinal injury. It can also serve as a rehabilitation and preventive training device for athletes (Ball et al., 2019).

5. Conclusion

The developed biomechanical rehabilitation device presents a novel, multi-modal, and highly effective solution for spinal therapy.

By combining traction, infrared irradiation, vibration, and electro-puncture under controlled mechanical conditions, the device:

- Reduces pain and inflammation

- Improves blood flow and disc hydration
- Strengthens paraspinal musculature
- Enables safe exercise during recovery

The system is suitable for both clinical and sports environments, supporting long-term spinal health and functional improvement.

References

Ball, J. R., Harris, C. B., Lee, J., & Vives, M. J. (2019). Lumbar spine injuries in sports: Review of the literature and current treatment recommendations. *Sports Medicine – Open, 5*(1), Article 26. https://doi.org/10.1186/s40798-019-0199-7

Deyo, R. A., & Mirza, S. K. (2016). Herniated lumbar intervertebral disk. *New England Journal of Medicine, 374*(18), 1763–1772. https://doi.org/10.1056/NEJMcp1512658

French, S. D., Cameron, M., Walker, B. F., Reggars, J. W., & Esterman, A. J. (2006). Superficial heat or cold for low back pain. *Cochrane Database of Systematic Reviews*, (1), Article CD004750. https://doi.org/10.1002/14651858.CD004750.pub2

Furlan, A. D., van Tulder, M. W., Cherkin, D. C., Tsukayama, H., Lao, L., Koes, B. W., & Berman, B. M. (2005). Acupuncture and dry-needling for low back pain. *Cochrane Database of Systematic Reviews*, (1), Article CD001351. https://doi.org/10.1002/14651858.CD001351.pub2

Hartvigsen, J., Hancock, M. J., Kongsted, A., Louw, Q., Ferreira, M. L., Genevay, S., Hoy, D., Karppinen, J., Pransky, G., Sieper, J., Smeets, R. J., Underwood, M., & Buchbinder, R. (2018). What low back pain is and why we need to pay attention. *The Lancet, 391*(10137), 2356–2367. https://doi.org/10.1016/S0140-6736(18)30480-X

Hayden, J. A., Ellis, J., Ogilvie, R., Malmivaara, A., & van Tulder, M. W. (2021). Exercise therapy for chronic low back pain. *Cochrane Database of Systematic Reviews*, (9), Article CD009790. https://doi.org/10.1002/14651858.CD009790.pub2

Panjabi, M. M. (1992). The stabilizing system of the spine. Part I. Function, dysfunction, adaptation, and enhancement. *Journal of Spinal Disorders, 5*(4), 383–389. https://doi.org/10.1097/00002517-199212000-00001

Rittweger, J. (2010). Vibration as an exercise modality: How it may work, and what its potential might be. *European Journal of Applied Physiology, 108*(5), 877–904. https://doi.org/10.1007/s00421-009-1303-3

Ropper, A. H., & Zafonte, R. D. (2015). Sciatica. *New England Journal of Medicine, 372*(13), 1240–1248. https://doi.org/10.1056/NEJMra1410151

Wegner, I., Widyahening, I. S., van Tulder, M. W., Blomberg, S. E. I., de Vet, H. C. W., Brønfort, G., Bouter, L. M., & van der Heijden, G. J. (2013). Traction for low-back pain with or without sciatica. *Cochrane Database of Systematic Reviews*, (8), Article CD003010. https://doi.org/10.1002/14651858.CD003010.pub5